RoHS Compliant

REV	DESCRIPTION OF CHANGE	DATE
A0	INITIAL RELEASE	2012-10-10

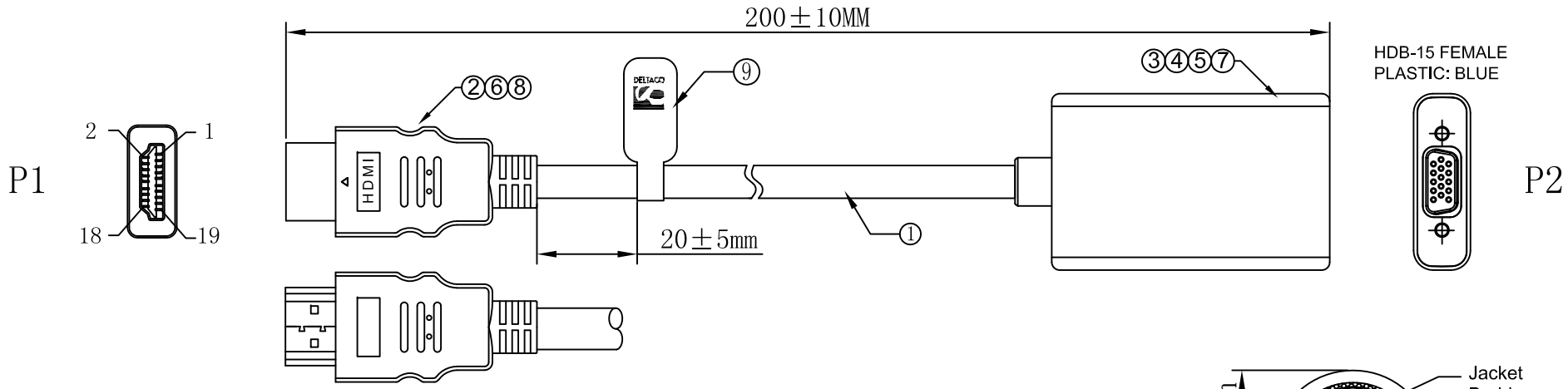

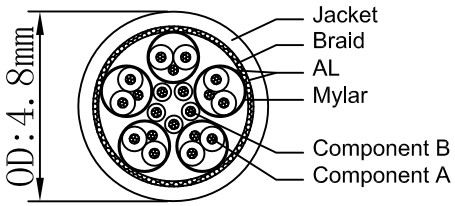

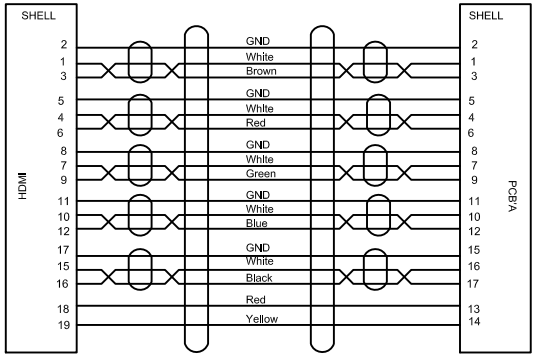

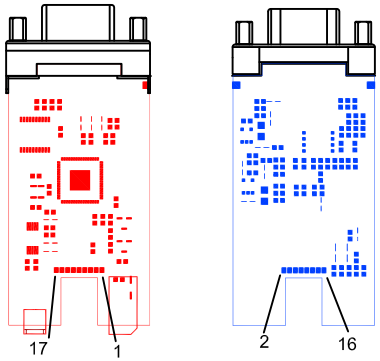

LT PCB'A

NOTES:

1. ELECTRICAL PROPERTIES:

1.1 100% open and short test.

1.2 Conductor resistance: 5 OHMS

1.3 Insulation resistance: 10 MEGOHMS

1.4 Hi pot: DC300V/0.01S

*1.5 Audio & Vedio test, Output resolution: 1920*1080 P*

2. All material be ROHS compliant.

NO.	Material name	Item number	Specifications Description	Quantity
9	tag	AM-BQ0211	Black background, White character(HDMI-VGA7)	1 Pcs
8	PVC	PVC-0001	60P PVC Black	5.10g
7	PVC	PVC-0001	60P PVC Black	2.50g
6	PE	PE-0001	LDPE(RoHs)	1.80g
5	Lid	SL-BK0202	VGA Black Shell	1 Pcs
4	Shell	SL-BK0245	VGA Black Shell(smooth)	1 Pcs
3	Connector	XY-C216-111-G	HDMI to VGA(F) PCB'A,gold-plated	1 Pcs
2	Connector	CN-G0022	HDMI(M),gold-plated	1 Pcs
1	Cable	DP1-48-3453	UL20276 [(34#*1P+D+AL+MY)*5P+*34#*5C+AL+B16/10/0.08TC], JACKET PVC BLACK OD=4.80±0.15mm L=140+5/-0MM	1 Pcs

图号 (DWG NO)	XY-A0597	单位 (UNIT): MM	DELTACO
版次 (REV):	A0	比例 (SCALE) 1:1	
页次 (PAGE):	1/1		TITLE: HDMI M to VGA F+Power+Audio Cable
设计 (DESIGN)	Dean	DIMENSIONS ARE IN MILLIMETERS TOLERANCES: LINEAR: X ± 1.0, X.X ± 0.5, X.XX ± 0.15, X.XXX ± 0.05; ANGULAR: ± 0.5°	PART NO: HDMI-VGA7
审核 (CHECKED)			
核准 (APPROVED)			